Slide & Swivel

Installation Instruction

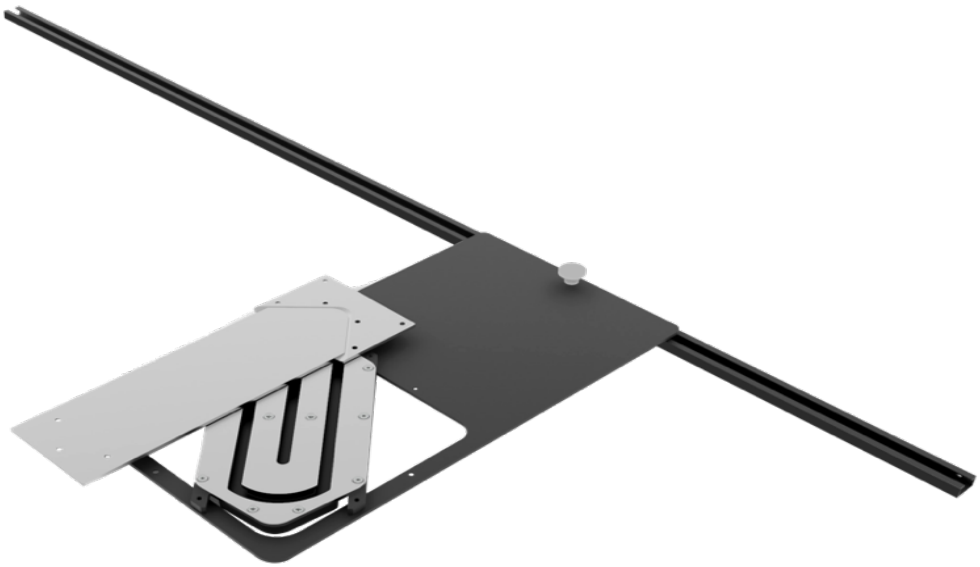

Model 450 mm – Article SS45
Model 550 mm – Article SS55
Model 600 mm – Article SS60
Model 650 mm – Article SS65
Model 700 mm – Article SS70

A) Content and technical Details

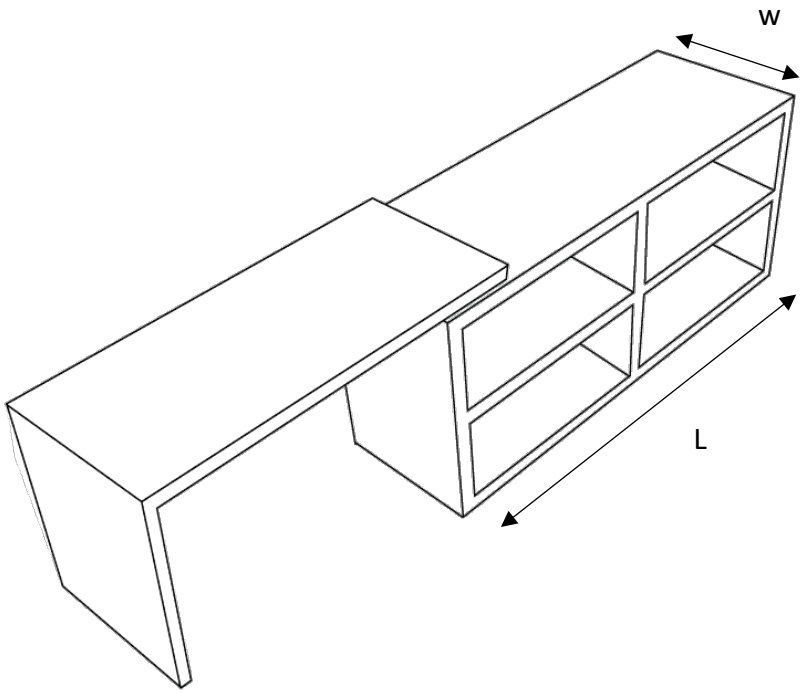

Technical details

Applicable width of desk (w):	450, 550, 600, 650 and 700 mm (excluding sliding bar)
Minimum thickness of upper rotating desk (t):	38 mm
Gap between furniture and upper desk for rotation (g):	9.8 mm
Material:	Steel, Plastic

Safety Note:
Slide & Swivel can only be installed with a supporting side leg to avoid damage.

1x sliding mechanism tray *(pre-installed)*

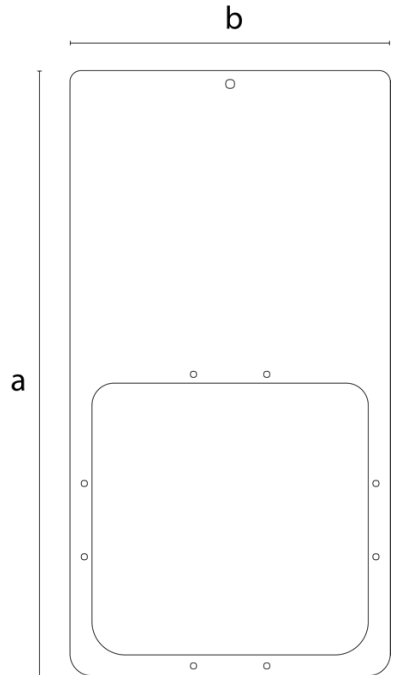

Depth w	a (mm)	b (mm)	Weight tray (kg)
450	446.5	237.5	5.2
550	549	290.5	6.8
600	574	290.5	7.2
650	599	290.5	7.8
700	624	290.5	8.2

1x sliding bar

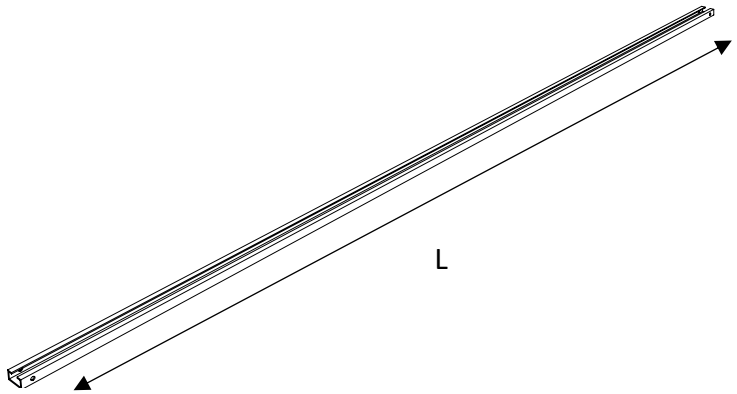

Dimensions:
W 28 mm, H 15 mm, L 1500 mm or 2000 mm,

Weight:
1500 mm - 1.0 kg, 2000 mm – 1.5 kg

Note: In case you need to cut the sliding bar to a different length, please remember to also drill the hole for mounting on the side that has been cut.

1x table rotation mechanism (pre-installed)

ST3040 *or* ST4070
(with 450 mm model) *(with 550, 600, 650 and 700 mm models)*

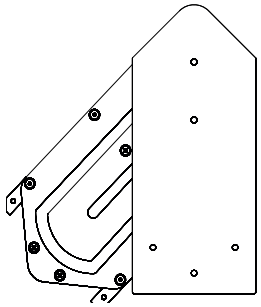

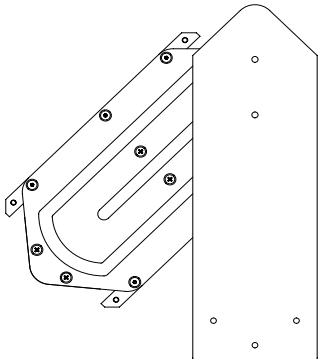

1x locking plate

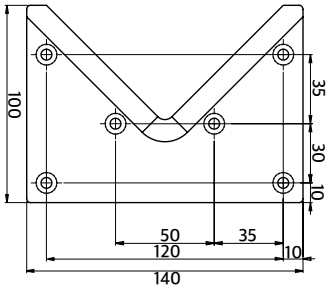

1x fixing screw with plastic stopper

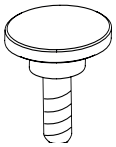

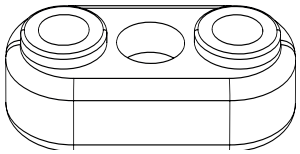

2x plastic stopper with 2x screws and 2x washer

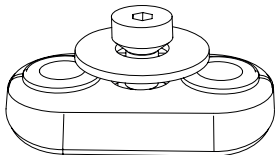

1x metal angle

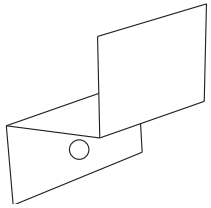

1x plastic felt glider set

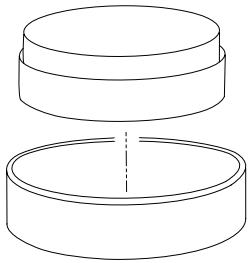

1x plastic felt glider set with space rings and M4x 16 mm *(pre-installed)*

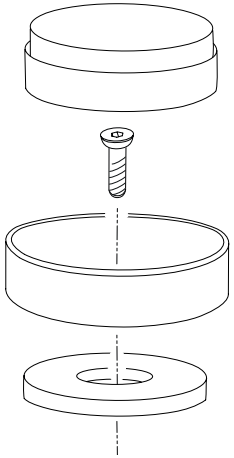

14x 5x 20 mm wood screws

10x M5x 10 mm screws

1x 4x 15 mm screw

B) Installation options

The mechanism can be installed in two ways, so that your desk either opens to the left or right. Installation between left and right can be changed any time. Please follow the installation steps accordingly.

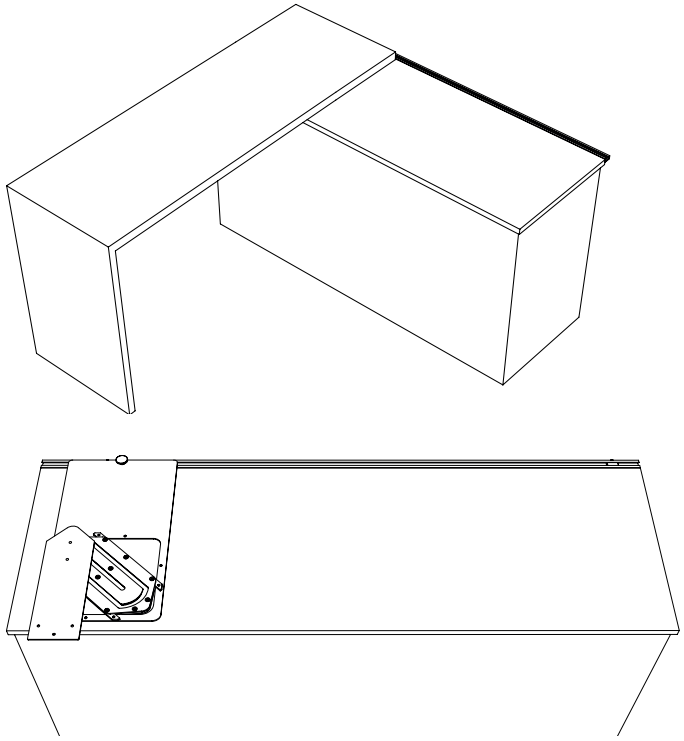

Left opening

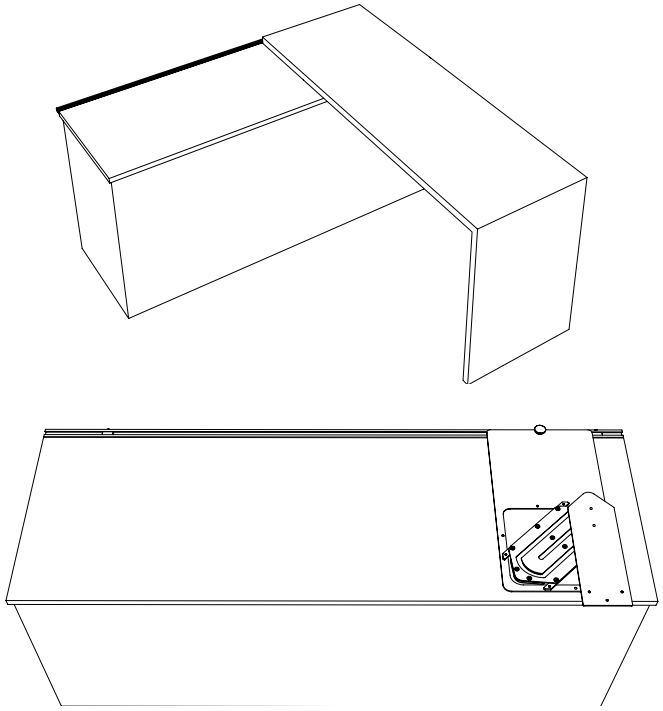

Right opening

C) Installation Steps

1. Mill the below form into the underside of the rotating desk. For measurements and details refer to drawing and 3D STEP file (download or request from www.thehynge.de).

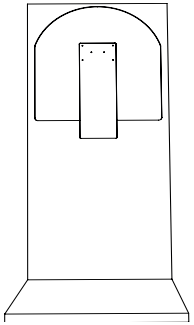

2. Align the top of the sliding bar with the upper surface of the furniture base. Install slider bar at rear of furniture with 2x 5x 20 mm wood screws, one on each side. Further, install the metal angle in the middle of the furniture to secure the sliding bar further.

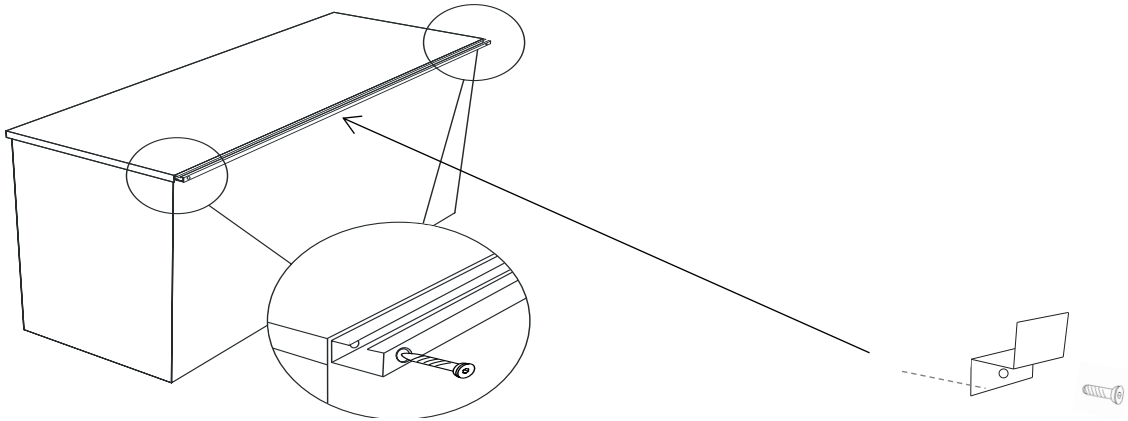

3. Choose your preferred option, left or right opening. The mechanism and felt glider are pre-installed for left opening. For right opening unscrew the 4x M5 screws from underneath and then install table rotation mechanism for right opening into slider mechanism as shown below.

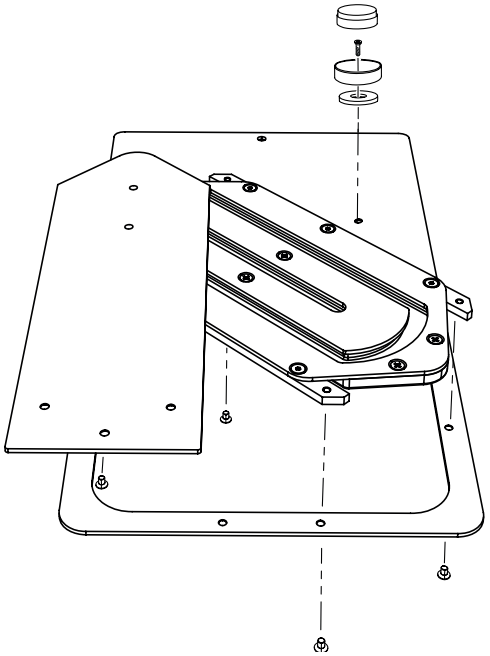

Option left opening

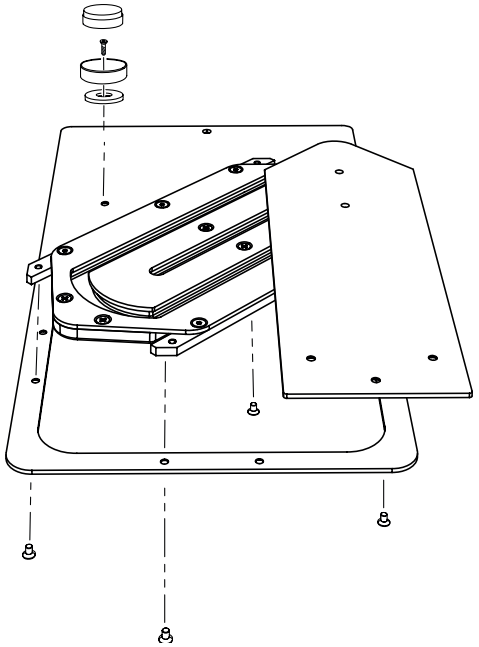

Option right opening

For right opening option take off felt glider cap and unscrew M4 screw from top. Then install round felt glider and space ring with M4 screw at the shown position. Put felt glider cap back on.

4. Install fixing screw

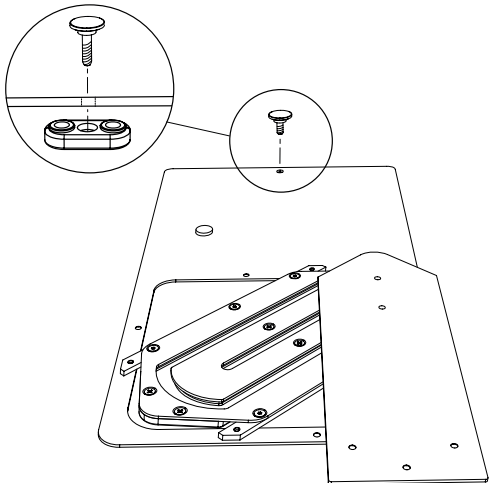

5. Insert sliding into sliding bar

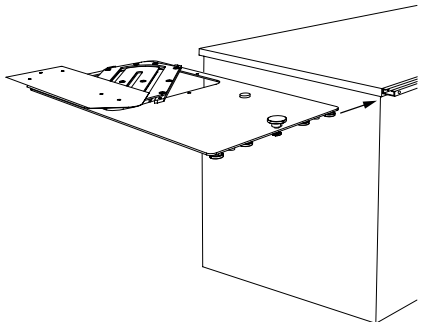

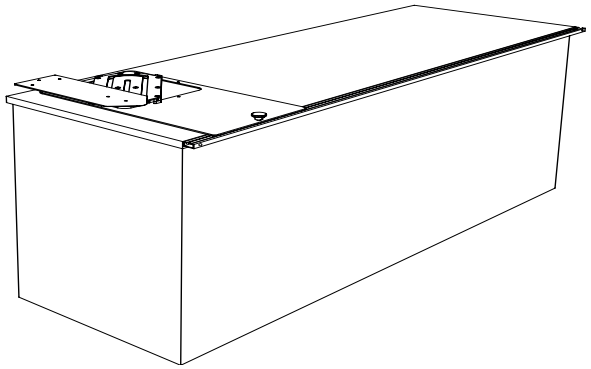

6. Install felt glider with wood screw 1x 4x10 mm and locking plate into position in upper desk with 6x 5x 20 mm

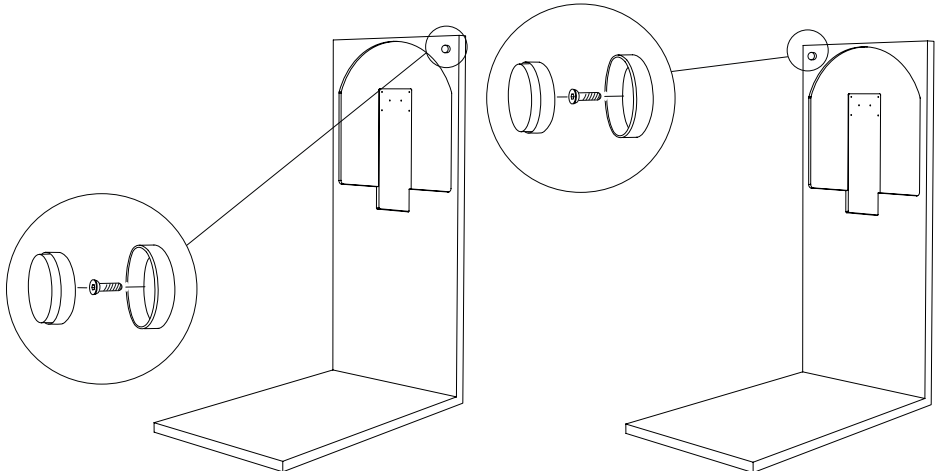

For Left opening

For right opening

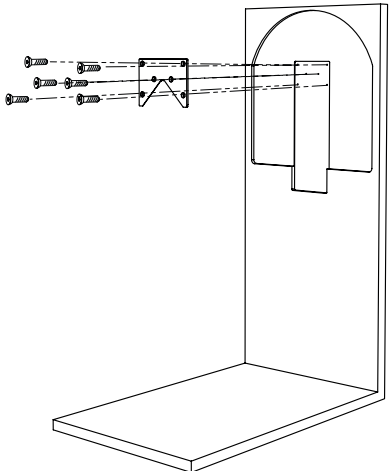

Locking plate

7. Install upper desk by hooking locking plate into mechanism, fix with 3x 5x 20 mm when in position

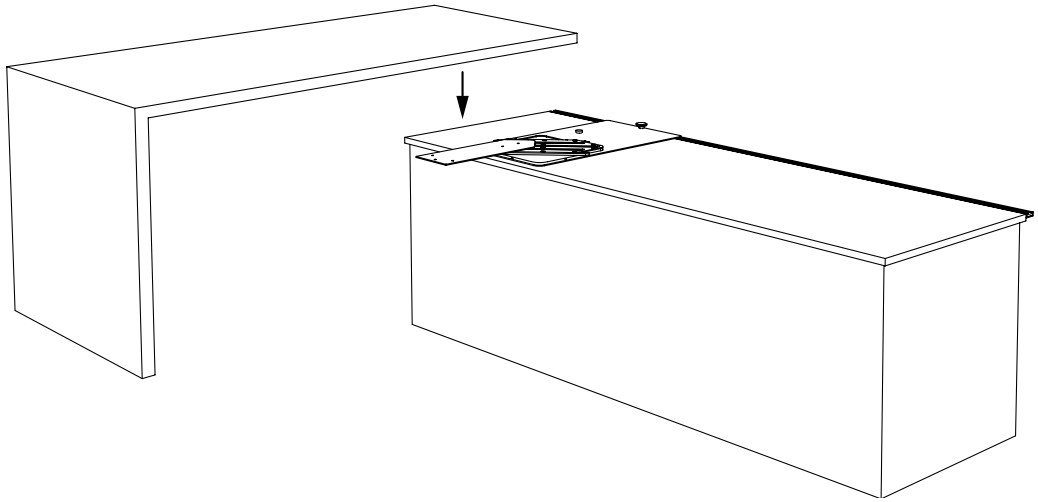

Turn your desk top upwards again and lift it over the furniture base. The desk should be moved in that way that the v-shape of the locking plate connects to the v-shape of the moveable plate of the CM4070 main mechanism. Pull the locking plate into the corresponding part of the moveable plate until they lock tight. Fix the screws into screw holes of the moveable plate underneath the desk. The desk is now ready for operation.

8. Install left and right stoppers in sliding bar

Slide 1 stopper set into the sliding bar from the left and 1 stopper set from the right.

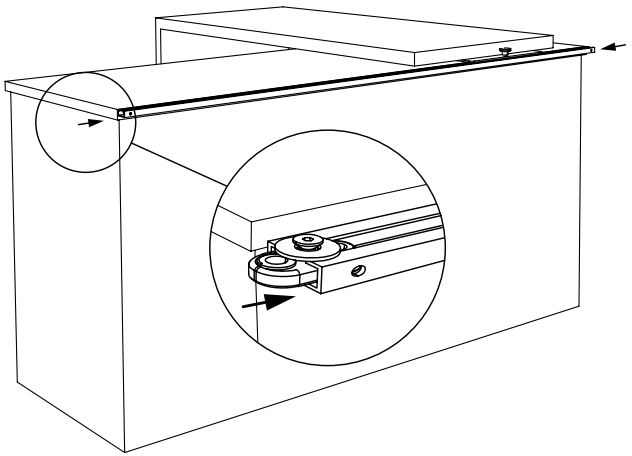

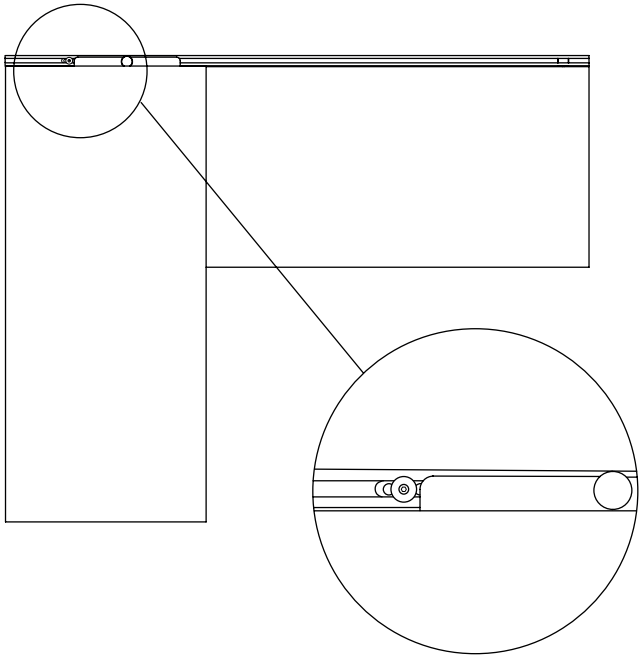

8.1 Move the upper desk to the left until the left side aligns with the furniture base on the left. Move the stopper towards the mechanism until a fix position is reached, tighten the screw.

8.2 Then move the upper desk to the right until the right side aligns with the furniture base on the right. Move the stopper towards the mechanism until a fix position is reached, tighten the screw.

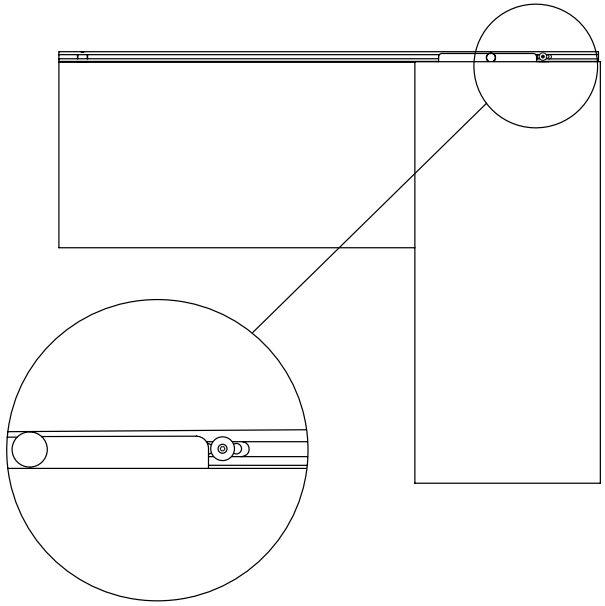

D) Operation of upper desk

Open – before opening the upper desk, fasten the fixing screw to avoid sliding sideways of the upper desk.

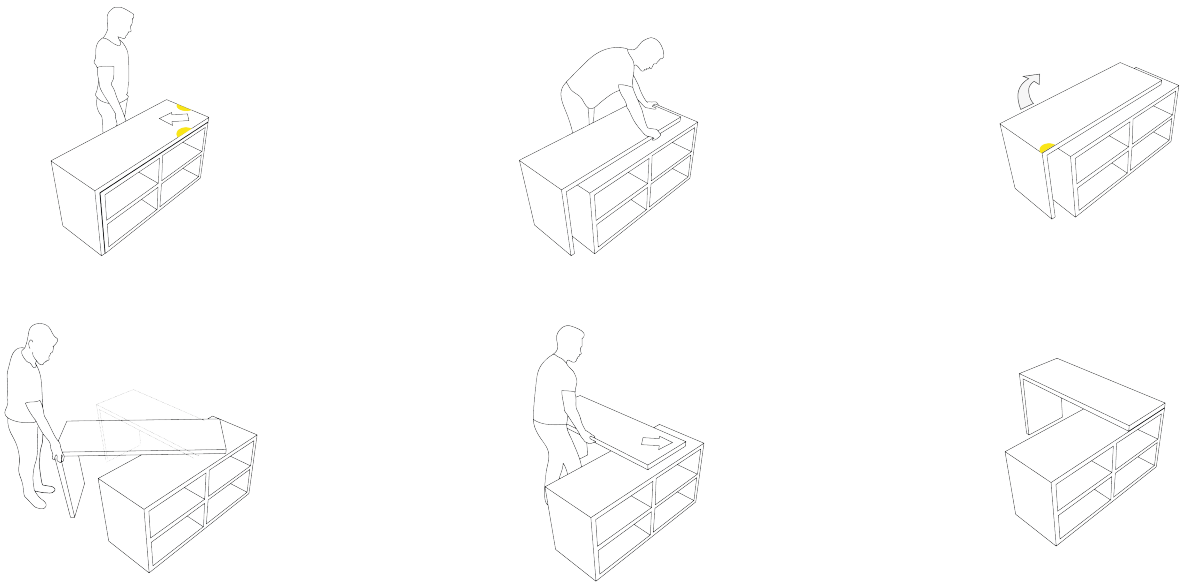

Slide sideways in open position – when sliding the desk sideways, loosen the fixing screw before you start.

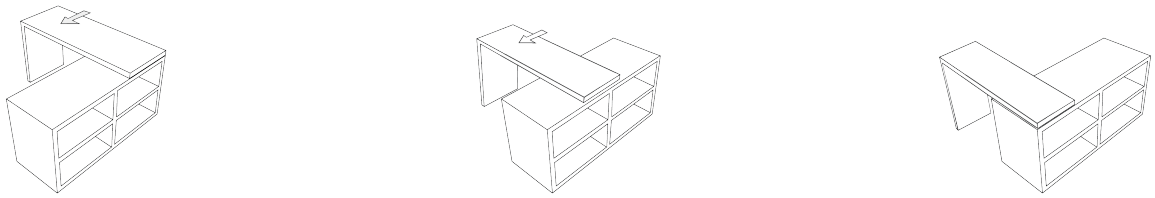

Close – before closing the upper desk, fasten the fixing screw to avoid sliding sideways of the upper desk.

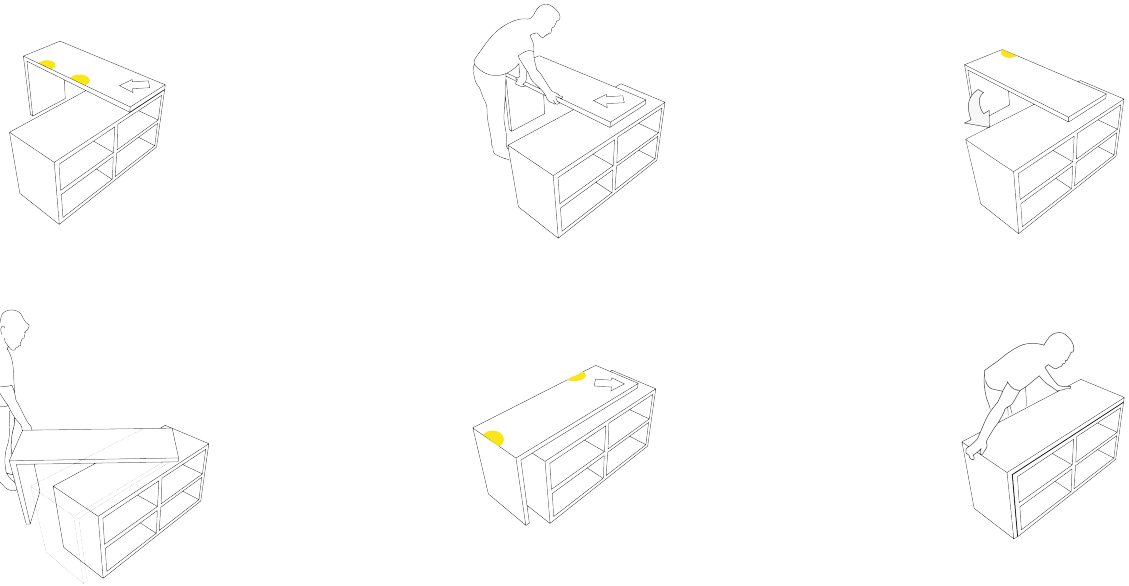
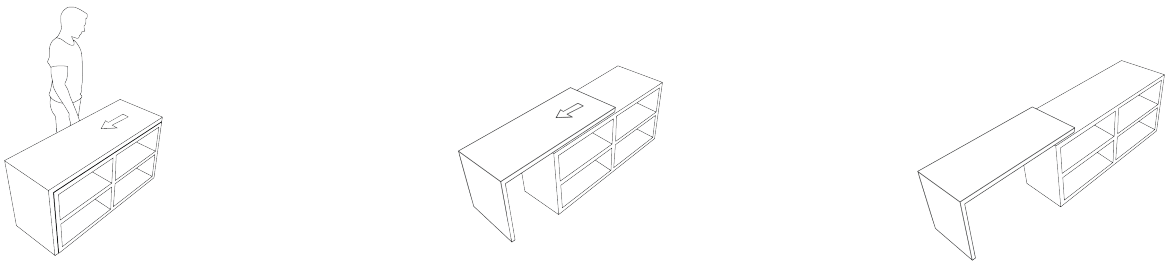
Slide sideways in closed position – when sliding the desk sideways, loosen the fixing screw before you start.