TV Lift

Electric height adjustable TV Lift

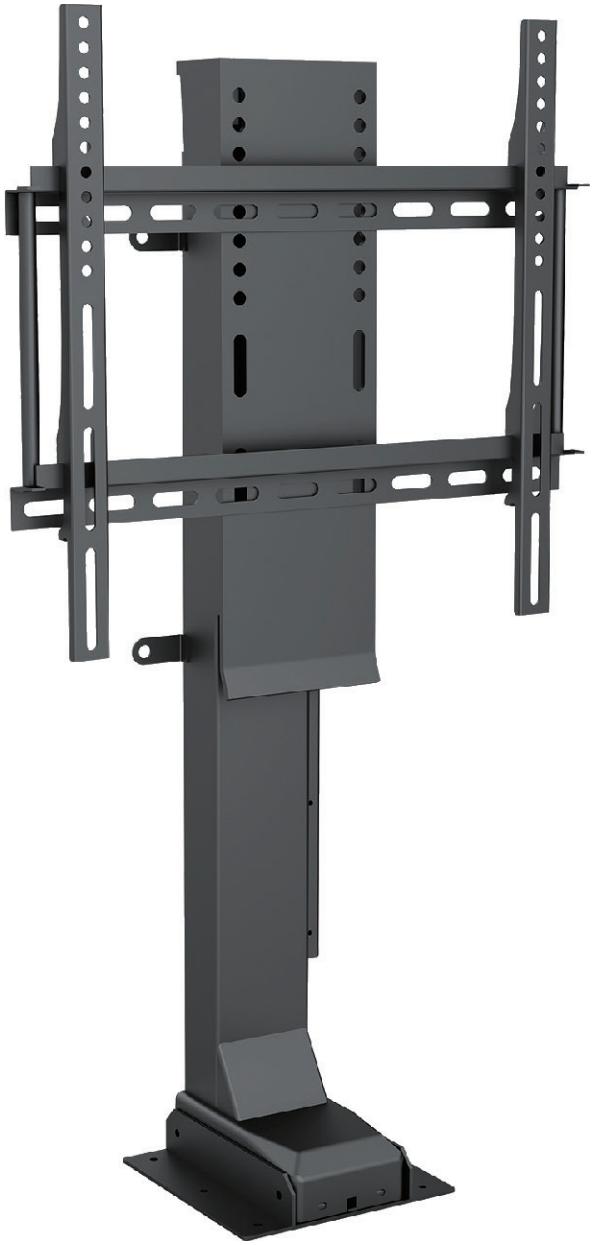

ASSEMBLY INSTRUCTIONS / OPERATING MANUAL

WARNING / INFORMATION

The following safety instructions safeguard the user from accidents and help to prevent damaging the TV Lift.

- Keep the remote control away from children.
- Keep children and pets away from the TV Lift.
- Keep all electrical components away from liquids (including rain).
- Do not put anything on top of the power adapter, power cord and control box.
- Do not open any of the components. You be in danger of an electric shock.
- When operating the TV Lift, make sure that all body parts and loose clothing stay clear of the operating area of the TV Lift.
- During the assembly or disassembly of the TV Lift the power must be disconnected at all times.
- When put into a furniture make sure to avoid any clamping edge and pinching risk. Please consider when doing so the guidelines of the Maschinenrichtlinie (CE-conformity) and perform and establish a risk analysis.
- It is not permitted to assemble or operate the TV Lift or the control box in areas with extreme temperatures (e.g. heating units).
- Pull the power plug immediately, in case of:
  - a power cord or a power plug is damaged,
  - liquids are spilled on the TV Lift or control box,
  - the lifting column or the control box have come in contact with water (also rain),
  - while doing repair, service or assembly work on the TV Lift.

USE / LIABILITY

This height adjustable TV Lift has an electrical motor and is designed exclusively fort he use within a casing, cladding or similar inside of dry rooms. All other use is at your own risk.

The manufacturer/seller does not offer under any circumstance any warranty or accepts any liability for damages caused by use or application not covered under this operating manual.

Please read the operating manual very carefully and keep it at a safe place.

Please be advised, that returns will only be accepted as long as shipped in the original packaging.

IMPORTANT: Please read these instructions carefully. When selling the TV Lift make sure that you provide your customer with these instructions.

TOOLS / CONTENT

Allen Key, No. 4

Phillips screw driver
or power drill, Z1 to Z3

Wrench, size 13

(Tools are not part of the kit)

No.	Component	QTY.
1	Lift column	1
2	Bracket for TV holder	1
3	Bracket for floor mounting	1
4a	TV holder for TV Lift 650	1
4b	TV holder for TV Lift 1000	
5	TV mounting strip	2
6	Control box	1
7	Cable operated pushbutton	1

No.	Component	QTY.
8	Remote control (batteries not included – needs 2 AAA-batteries)	1
9	Power cord	1
10	Connection cable	1
11	M8x16 Allen drive round head screw	4
12	M8 Lock nuts	4
13	Assembly and mounting material set	1
	Content: A-B: dowels and screws for wall mounting; C-F: various sizes of fasteners to attach different TV models from different manufacturers; G-H: spacing discs rubber; I-J: metal washers; K: leveler	

MONTAGE

1. Remove the packaging and check all components for completeness according to list of content on page 3. The TV Lift is delivered partially pre-assembled. Already mounted fasteners are not listed again. Due to shipping reasons, one only has to attach the TV-holder.

   Because of the size and then weight of the TV Lift, two people should do the assembly.

2. Check the operating functions of the TV Lift. Please proceed as follows:

   - Place the TV Lift in an upright position.
   - Connect the cable of the lift column 1 with the connecting cable 10.
   - Plug the connecting cable 10 in the control box 6.
   - Connect the control box 6 with a power outlet. The control-LED shines green.
   - Connect the pushbotton 7 with the control box 6. Move the lift upward for a few centimeters and then down again by pushing the „UP/DOWN“ buttons. The control-LED shines red.

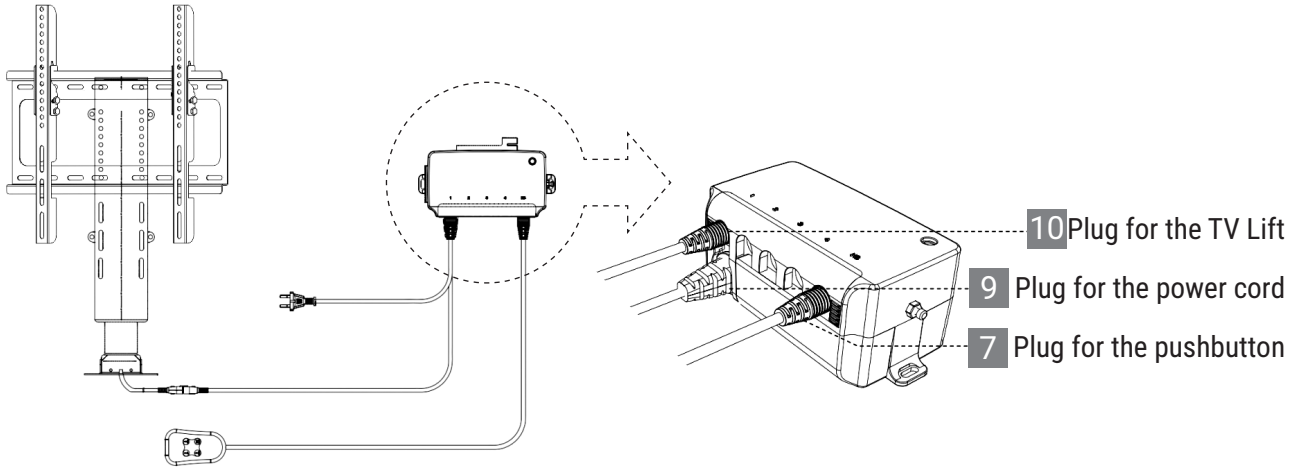

3. Attach the TV Lift vertically to a floor board or a back plate using the 6 mounting holes at the sides of the mounting plate 3 or alternatively the 4 mounting flabs alongside the lift column 1.

   Make sure that the lift column can be extended fully.

4. Make sure when assembling the TV Lift and the control box 6 that there is enough room for the cables so that they cannot get tangled up.

5. Plug the connecting cables 7 , 9 and 10 into the control box 6.

6. Check the lift mechanism by extending the lift column all the way.

7. Align then TV mounting strips with your TV and attach your TV centrally with the mounting strips. Use the included mounting material and leveler 13.

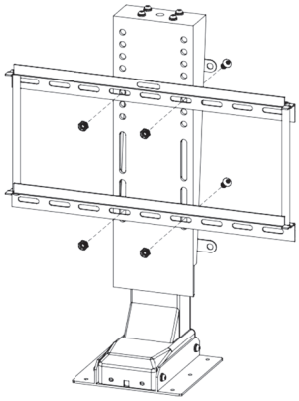

8. Attach the TV holder 4a or. 4b to the bracket 2. Here for use 4 of the M8x16 round-head socket screws 11 and 4 of the self-locking nuts 12.

> ℹ Make sure you attach the self-locking nuts on the correct side of the bracket. The correct side is on the outside.

9. Slide the TV mounting strips 5 with the pre-assembled TV-monitor onto the TV-holder 4a or 4b and secure the mounting strips with the pre-assembled screws M5x50·

10. Extend the TV Lift to its highest position.

11. Place the TV-monitor at the for you best position and move the TV Lift with the attached TV-monitor all the way down. Make sure the TV-monitor can move freely and in case put inside a piece of furniture fits all the way into the furniture.

12. Extend the TV Lift into its highest position once more and tighten all bolts and screws once more.

USE

How to program the remote control
For you to use the remote control, you have to program it first.

<u>Method 1</u>: Press the ⌃ and ⌄ button on the remote control and the „STUDY“ button on the pushbotton simultaneously.

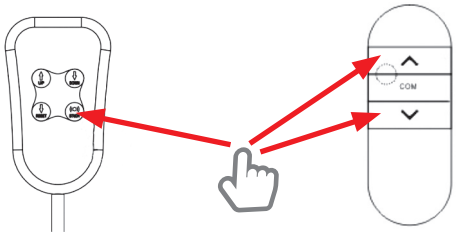

<u>Method 2</u>: Press the ⌃ and ⌄ button on the remote control and the black button on the side of the control box simultaneously.

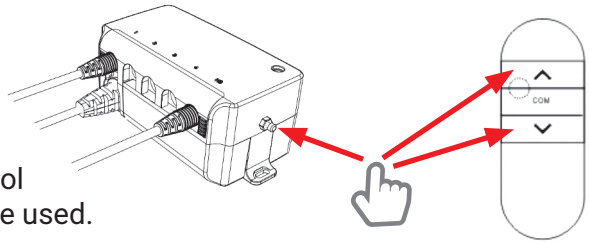

Push all button until the LED light of the remote control flashes 3 times. Now the remote control is ready to be used.

OPERATING

You can operate the TV Lift by using the remote control or the pushbutton.
The pushbutton supersedes the remote control.

You can operate the TV Lift by pushing ⌃ and ⌄ on the remote control
or by pushing „UP/DOWN“ on the pushbutton.

• constantly, until the desired position is reached (constant-touch-mode)
• once, until the desired position is reached, then again to stop the TV Lift in that position (one-touch-mode).

The pushbutton and the remote control are set in the one-touch-mode when first delivered.

IMPORTANT: Before you use the TV Lift it is important to perform a reset.

How to reset the TV Lift:
DPush the reset button on the pushbutton for 5 seconds. The red light on the pushbutton flashes once, indicating the RESET-mode.

Then, let go of the button. After that, push the button once again until the lift column reaches the bottom, moves up about 7mm and stops. Once the red light turns off, the reset has been completed.

- The flash pattern during a reset (flashes every 0,5 seconds) differs from the flash pattern during working mode (flashes every 3 seconds).
- While resetting, the constant-touch mode is activated.
- During the reset, only the RESET-button of the pushbutton is functional.
- In case the lift column was moving when initiating a RESET, the movement will be stopped.
- A RESET must be completed for the system to be fully operational again.

TROUBLE SHOOTING

In case the TV Lift does not operate properly, make sure, that all cables are attached to the TV Lift and disconnect the power plug for a few seconds. Plug the power back in and make certain, that the green control lamp on the control box is on. Maybe a RESET is necessary. If yes, please follow the instructions as outlined in „OPERATING – How to reset“.

- In case none of the buttons work when pushed, please perform a RESET.
- In case the motor acts unusual, please perform a RESET. In case the problem remains, please contact your seller.
- Should the lifting column move constantly for more than 3 minutes, a safety mechanism is activated. The system is put out of order, the buttons no longer work. As soon as the system changes to safety mode, the red light of the pushbutton flashes every 3 seconds. After about 16 minutes the system should be back fully operational.

PROGRAMMING

Constant-touch-mode: Constantly pushing the up/down button moves the lifting column up or down respectively. Releasing or pushing any other button of the system stops the movement. The movement also stops when the max extension/move back position is reached.

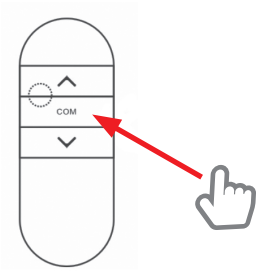

One-touch-mode: The lifting column moves up or down when the „UP/DOWN“ button is pressed once. When pressed again, the movement will stop.

Switching from constant-touch to one-touch:
Pressing the **„COM" button** on the remote control for 10 seconds will switch from constant-touch to one-touch and vice versa. When power is interrupted, the set mode is retained.

HOW TO SELECT A LIMIT FOR THE HIGHEST/LOWEST POSITION

This product was designed for you to have the most position options when selecting the highest or lowest position of the lifting column. In case you do not want to utilize these, please change the settings using the pushbutton.

To pre-select the highest position:
Starting at the lowest position **push the „UP“ and the „RESET“ button** simultaneously.
After 3 seconds the red LED will illuminate. The lifting column moves up slowly. Once the lifting column has reached the desired height, release the buttons. The highest position is then set.

To pre-select the lowest position:
Starting at the highest position push the „DOWN“ and the „RESET“ button simultaneously.
After 3 seconds the red LED will illuminate. The lifting column moves down slowly. Once the lifting column has reached the desired height, release the buttons. The lowest position is then set.

- The programmed settings for the highest and lowest position remain in place, even after a power outage.
- The programmed settings for the highest and lowest position remain in place, even after a RESET.

TECHNICAL SPECIFICATIONS

Stroke TV Lift 650:	650 mm / retracted 570 mm, fully extended 1.220 mm
Stroke TV Lift 1000:	1000 mm / retracted 810 mm, fully extended 1.810 mm
Stroke speed:	30 mm/s load-free
Duty cycle:	10 % (approx. 6 min/h or 3 min continuous) under full load
Max load capacity:	60 kg
Overload protection:	8.5 A
Voltage:	110 V / 230 V
Remote control:	2,4 GHZ
VESA:	TV Lift 650: 400x400 mm / TV Lift 1000: 600x400 mm

DIMENSIONAL DRAWINGS

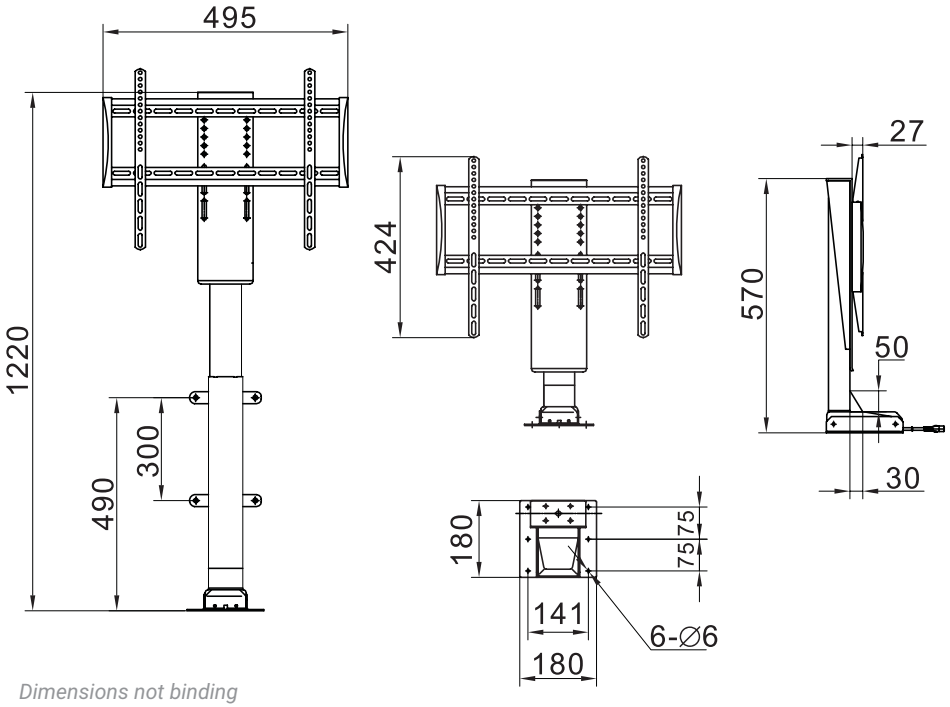

Dimensions not binding

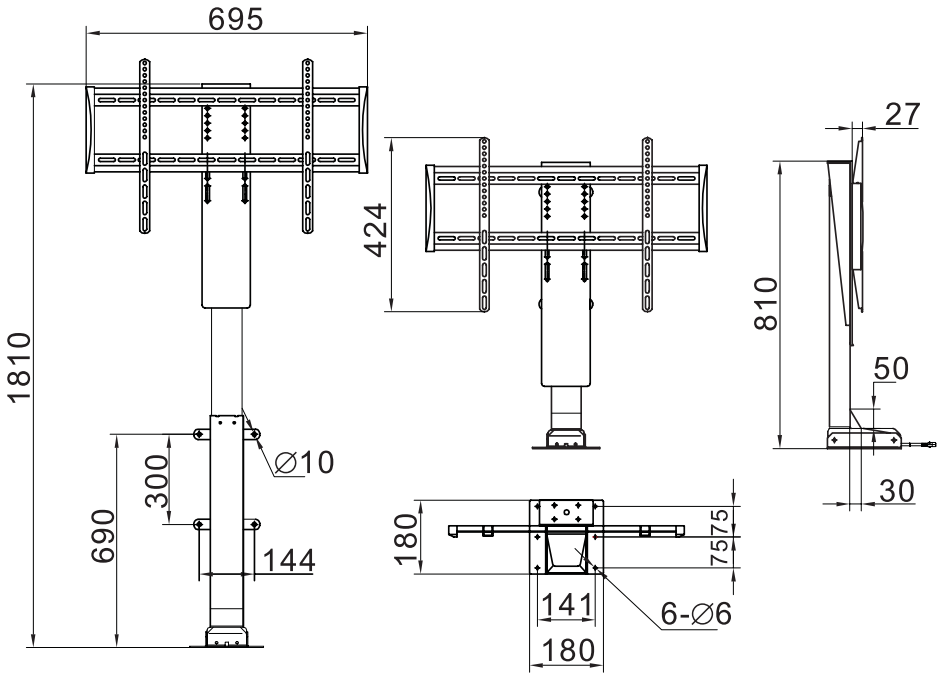

Dimensions not binding

Reserve technical changes • As of 07/2019-VOT