ATIM S.p.a.
Articoli tecnici per l'industria del mobile
Via IV Novembre, 52/b
20019 Settimo Milanese
Milano Italy
Tel : +39-02-33503203 R.A.
Fax : +39-02-33516514
E-Mail : info@atimspa.com
Web : www.atimspa.com

ASSEMBLY INSTRUCTIONS: BASIC mm 1600x800x730

ATIM'S CODE: 411/78.0219

.10 BLACK RAL 9005
.12 WHITE RAL 9003
.22 NATURAL ARC
.24 BRILL

Accessories bag contents:

12 x	TPS M6 x 16 CE nickel-plated screw	cod. 2.652941.06
8 x	ABS cap 51x50x2,3 mm GRAY	cod. 2.5522105.13
4 x	TCBCE M6x10 ISO 7380 zinc-plated screw	cod. 2.6510971.02
4 x	White adhesive felt pad 35 x 35 x 3	cod. 2.653467.01
1 x	Galvanized hexagonal wrench n ° 4	cod. 2.553061.02

Box contents:

4 x	Leg mm 726 p.AB029 with joint (2 x left / 2 x right)	cod. 3.2014185.xx
1 x	Complete Frame of Glass Brackets	
1 X	Extension 500x800x12 mm GRAY	Cod. 2.9122216.13

1

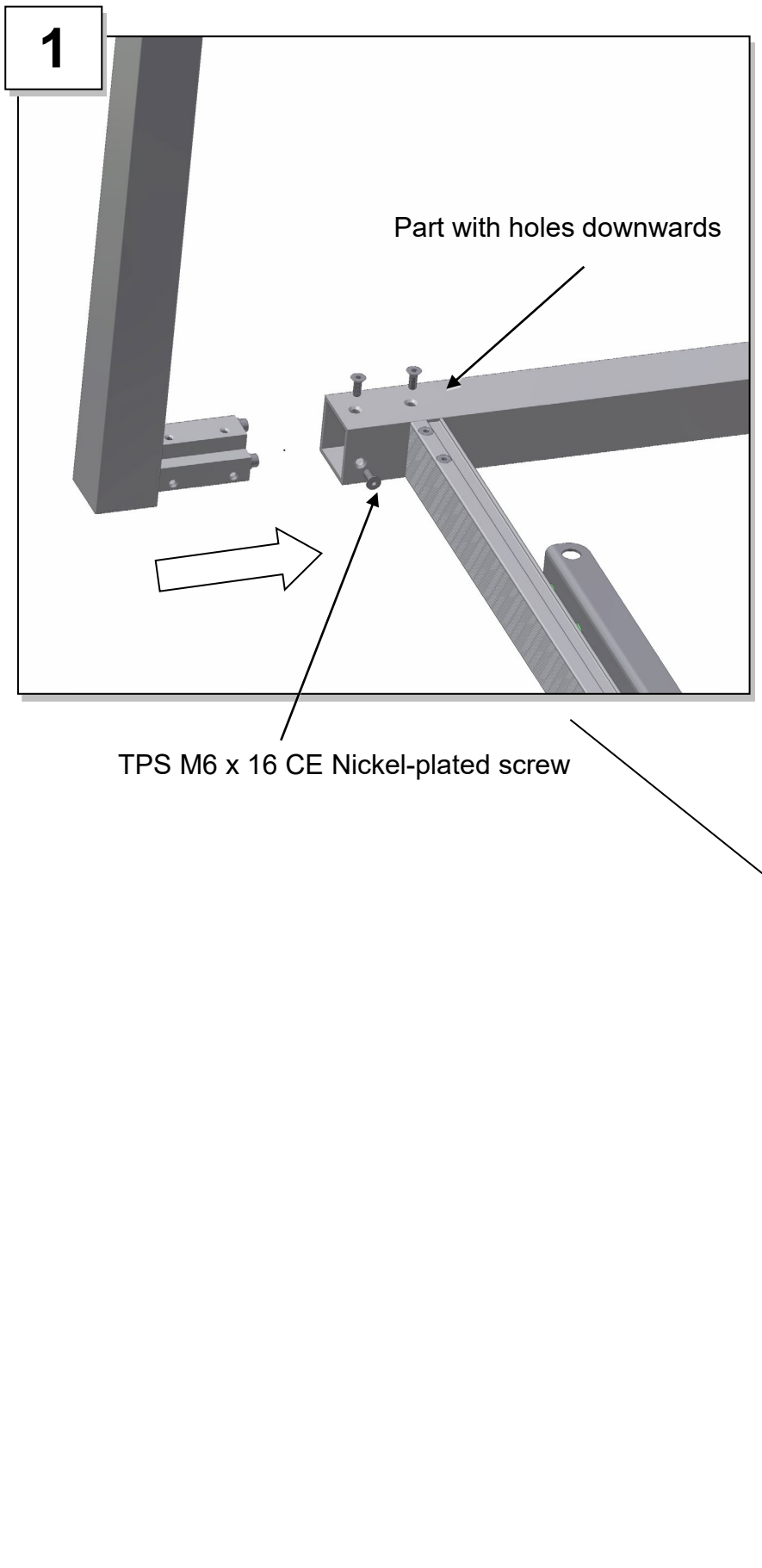

Align the leg with the pre-assembled joint on the crosspiece until the holes on the joint match up with those on the crosspiece. Then insert the 3 TPS M6 x 16 screws and screw them in. Repeat the same operation with the 4 legs of the table, paying attention to the correct positioning of the left and right legs.

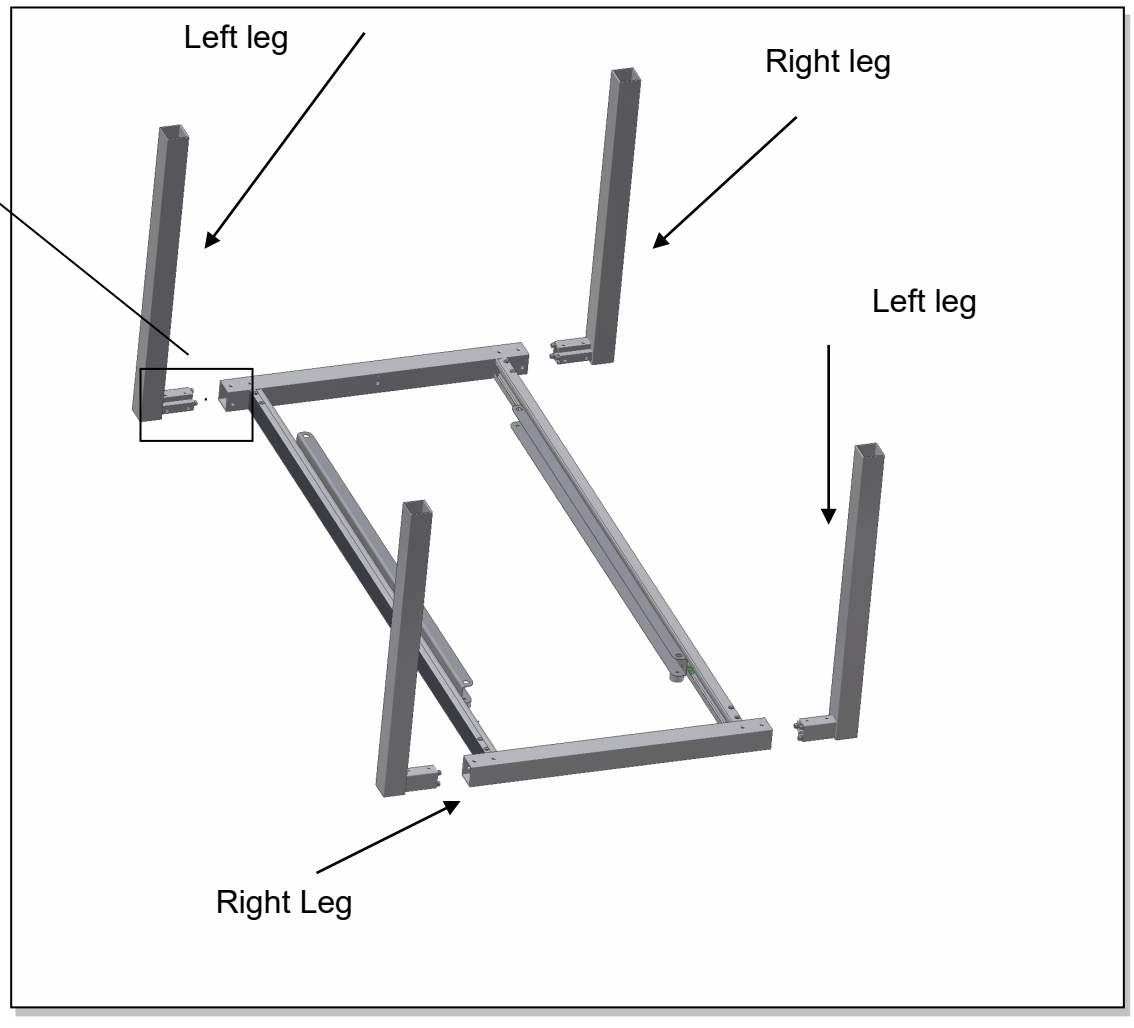

ATIM S.p.a.
Articoli tecnici per l'industria del mobile
Via IV Novembre, 52/b
20019 Settimo Milanese
Milano Italy
Tel : +39-02-33503203 R.A.
Fax : +39-02-33516514
E-Mail : info@atimspa.com
Web : www.atimspa.com

2

Mount the glass on the two brackets of the frame, screwing the 4 TCBCE M6x10 screws on the crystal pads.
ATTENTION: the frame is designed with one side where the extension is to be positioned ("EXTENSION SIDE") and one side where the top will slide ("FIXED SIDE"). The glass must be screwed following the orientation shown in the image below, so that it slides towards the "FIXED SIDE of the table.

Glue the adhesive felt pads under the caps that rest on the ground.

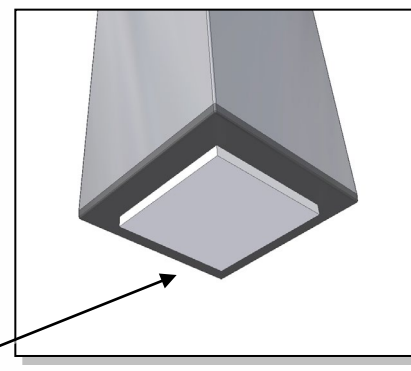

Felt pad

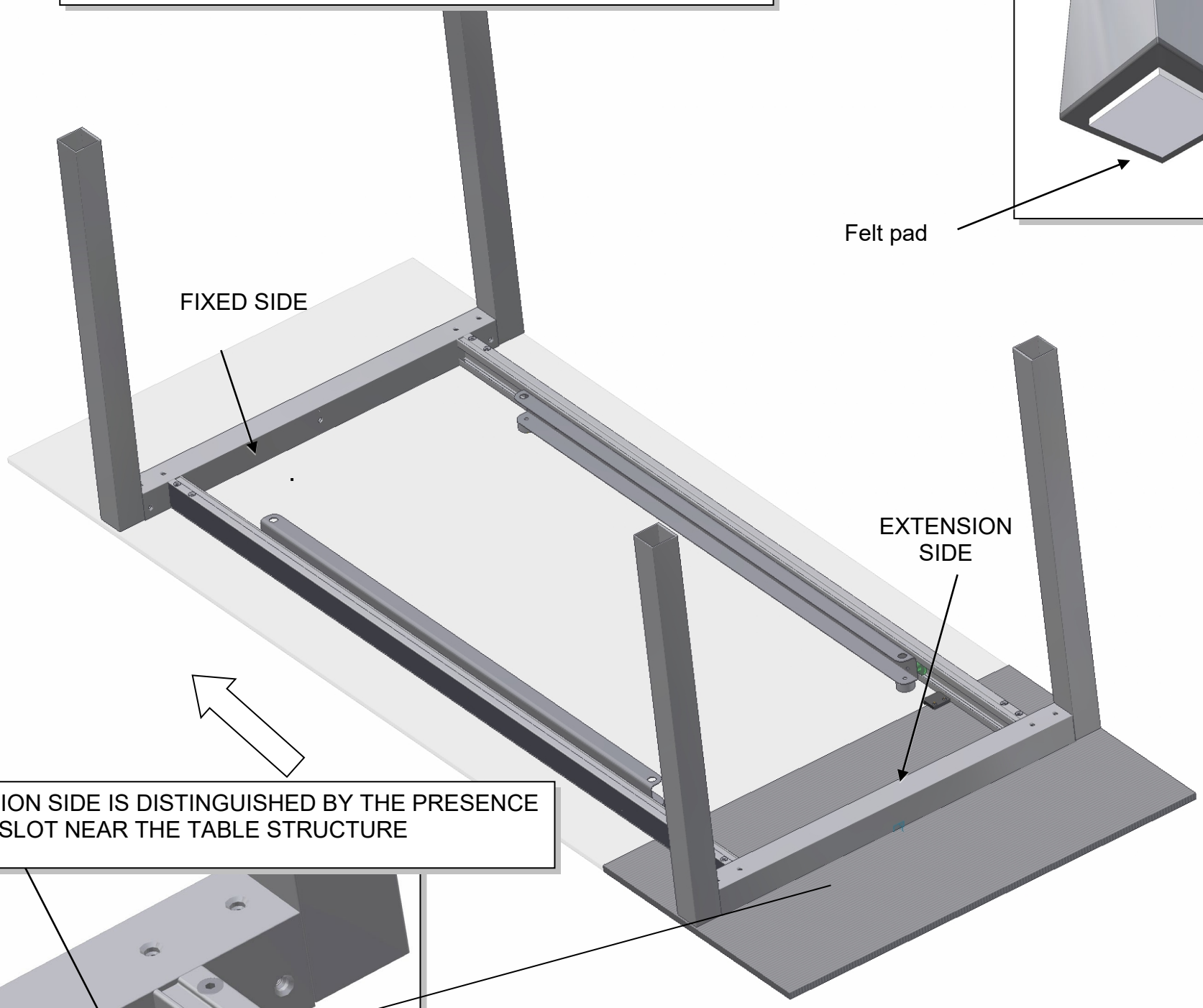

THE EXTENSION SIDE IS DISTINGUISHED BY THE PRESENCE OF A SMALL SLOT NEAR THE TABLE STRUCTURE

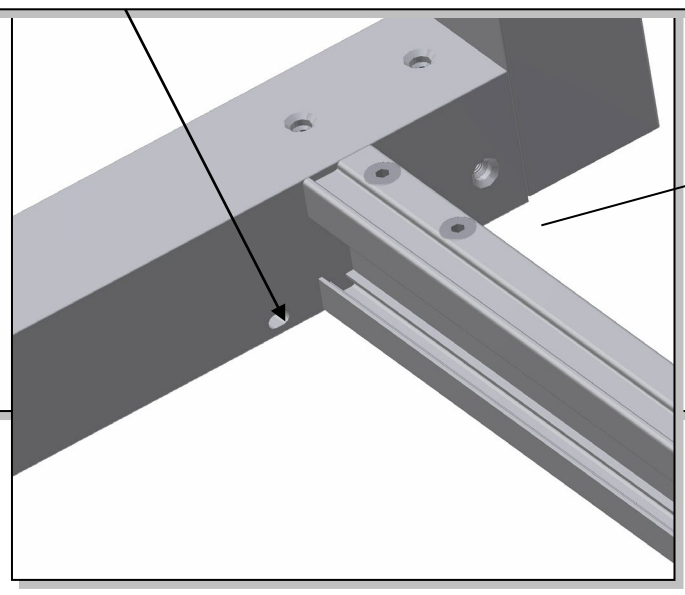

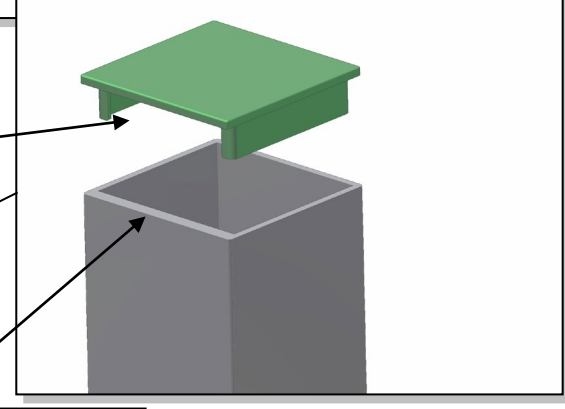

DISCHARGED SIDE

CAUTION: when fitting the caps on the legs, make sure that the discharged side of the cap faces the same side as the thicker side of the leg

THICKER SIDE